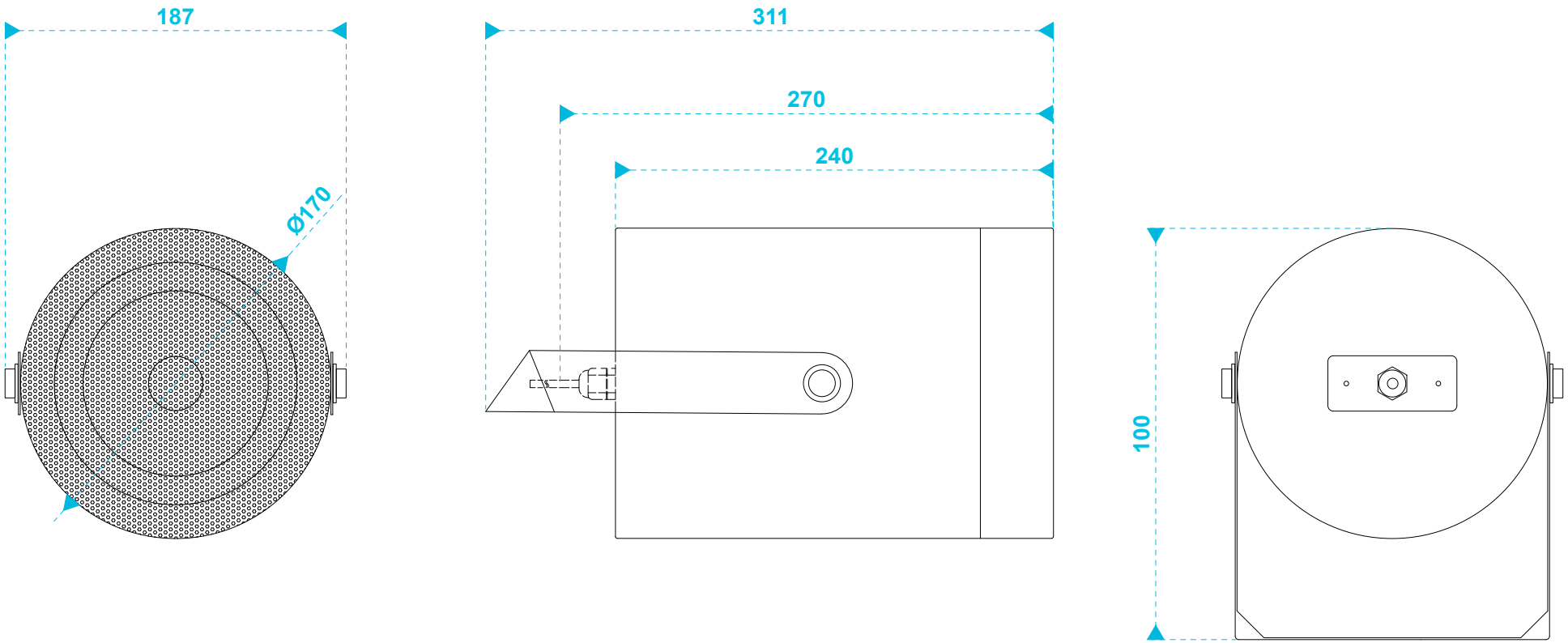

	model name	product type	file modification date	unit of measurement
apart	MP26-G	music projector	2017-06-13	mm